Cambridge International AS & A Level

Cambridge Assessment International Education
Cambridge International Advanced Subsidiary and Advanced Level

PHYSICS **9702/12**

Paper 1 Multiple Choice **February/March 2019**

1 hour 15 minutes

Additional Materials: Multiple Choice Answer Sheet
Soft clean eraser
Soft pencil (type B or HB is recommended)

5008401313

READ THESE INSTRUCTIONS FIRST

Write in soft pencil.
Do not use staples, paper clips, glue or correction fluid.
Write your name, centre number and candidate number on the Answer Sheet in the spaces provided unless this has been done for you.
DO **NOT** WRITE IN ANY BARCODES.

There are **forty** questions on this paper. Answer **all** questions. For each question there are four possible answers **A**, **B**, **C** and **D**.
Choose the **one** you consider correct and record your choice in **soft pencil** on the separate Answer Sheet.

Read the instructions on the Answer Sheet very carefully.

Each correct answer will score one mark. A mark will not be deducted for a wrong answer.
Any working should be done in this booklet.
Electronic calculators may be used.

This document consists of **20** printed pages.

© UCLES 2019

Data

speed of light in free space	$c = 3.00 \times 10^{8}\,\text{m s}^{-1}$
permeability of free space	$\mu_0 = 4\pi \times 10^{-7}\,\text{H m}^{-1}$
permittivity of free space	$\varepsilon_0 = 8.85 \times 10^{-12}\,\text{F m}^{-1}$
	$\left(\frac{1}{4\pi\varepsilon_0} = 8.99 \times 10^{9}\,\text{m F}^{-1}\right)$
elementary charge	$e = 1.60 \times 10^{-19}\,\text{C}$
the Planck constant	$h = 6.63 \times 10^{-34}\,\text{J s}$
unified atomic mass unit	$1\,\text{u} = 1.66 \times 10^{-27}\,\text{kg}$
rest mass of electron	$m_\text{e} = 9.11 \times 10^{-31}\,\text{kg}$
rest mass of proton	$m_\text{p} = 1.67 \times 10^{-27}\,\text{kg}$
molar gas constant	$R = 8.31\,\text{J K}^{-1}\,\text{mol}^{-1}$
the Avogadro constant	$N_\text{A} = 6.02 \times 10^{23}\,\text{mol}^{-1}$
the Boltzmann constant	$k = 1.38 \times 10^{-23}\,\text{J K}^{-1}$
gravitational constant	$G = 6.67 \times 10^{-11}\,\text{N m}^2\,\text{kg}^{-2}$
acceleration of free fall	$g = 9.81\,\text{m s}^{-2}$

© UCLES 2019

Formulae

uniformly accelerated motion	$s = ut + \frac{1}{2}at^2$ $v^2 = u^2 + 2as$
work done on/by a gas	$W = p\Delta V$
gravitational potential	$\phi = -\frac{Gm}{r}$
hydrostatic pressure	$p = \rho gh$
pressure of an ideal gas	$p = \frac{1}{3}\frac{Nm}{V}\langle c^2 \rangle$
simple harmonic motion	$a = -\omega^2 x$
velocity of particle in s.h.m.	$v = v_0 \cos \omega t$ $v = \pm\omega\sqrt{(x_0^2 - x^2)}$
Doppler effect	$f_o = \frac{f_s v}{v \pm v_s}$
electric potential	$V = \frac{Q}{4\pi\varepsilon_0 r}$
capacitors in series	$1/C = 1/C_1 + 1/C_2 + \ldots$
capacitors in parallel	$C = C_1 + C_2 + \ldots$
energy of charged capacitor	$W = \frac{1}{2}QV$
electric current	$I = Anvq$
resistors in series	$R = R_1 + R_2 + \ldots$
resistors in parallel	$1/R = 1/R_1 + 1/R_2 + \ldots$
Hall voltage	$V_H = \frac{BI}{ntq}$
alternating current/voltage	$x = x_0 \sin \omega t$
radioactive decay	$x = x_0 \exp(-\lambda t)$
decay constant	$\lambda = \frac{0.693}{t_{\frac{1}{2}}}$

© UCLES 2019

[Turn over

1 A wave has a frequency of 5 GHz.

What is the period of the wave?

A 200 ps

B 2 ns

C 20 ns

D 20 000 μs

2 At temperatures close to 0 K, the specific heat capacity c of a particular solid is given by $c = bT^3$, where T is the temperature and b is a constant, characteristic of the solid.
The SI unit of specific heat capacity is $J\,kg^{-1}\,K^{-1}$.

What is the unit of constant b, expressed in SI base units?

A $m^2\,s^{-2}\,K^{-3}$

B $m^2\,s^{-2}\,K^{-4}$

C $kg\,m^2\,s^{-2}\,K^{-3}$

D $kg\,m^2\,s^{-2}\,K^{-4}$

3 The speed of an aircraft in still air is $200\,km\,h^{-1}$. The wind blows from the west at a speed of $85.0\,km\,h^{-1}$.

In which direction must the pilot steer the aircraft in order to fly due north?

A 23.0° east of north

B 23.0° west of north

C 25.2° east of north

D 25.2° west of north

© UCLES 2019

4 A digital balance is used to weigh ingredients in a laboratory. When a weight is applied to the digital balance, an electronic circuit generates a current which is then converted into a digital readout on the display.

The electronic circuit gives a current of 2.0 mA when a weight of 30 N is applied, and a current of 0.5 mA when a weight of 5 N is applied.

Which calibration curve could represent this circuit?

A

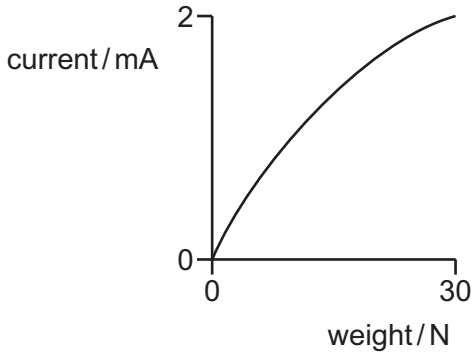

B

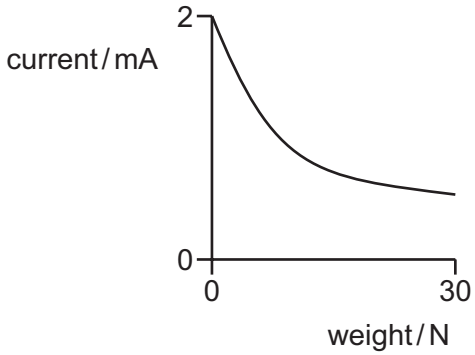

C

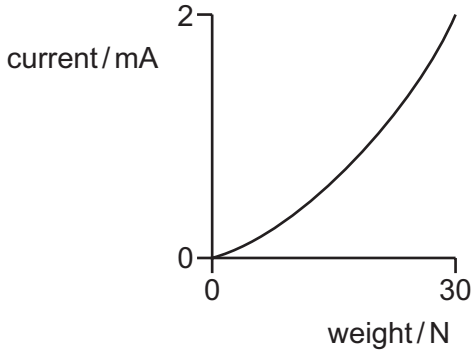

D

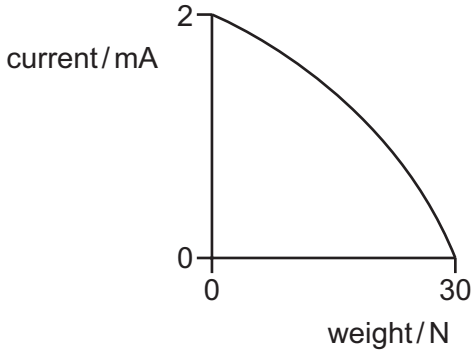

5 Four students measure a time interval that is known to be 1.734 s.

The measurement recorded by each student is shown.

Which measurement is the most accurate?

A 1 s **B** 1.7 s **C** 1.83 s **D** 1.604 s

© UCLES 2019

6 A mass on the end of a spring bounces up and down as shown, after being released at time $t = 0$.

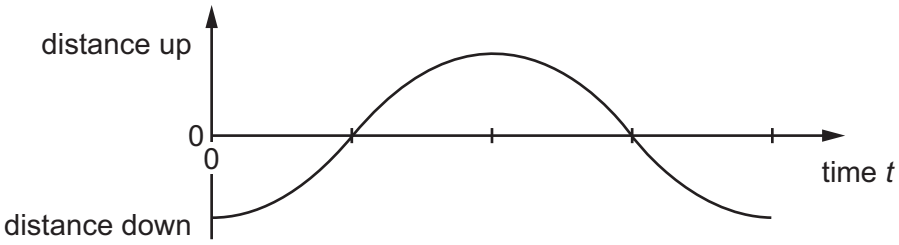

Which graph shows how the velocity varies with time?

A

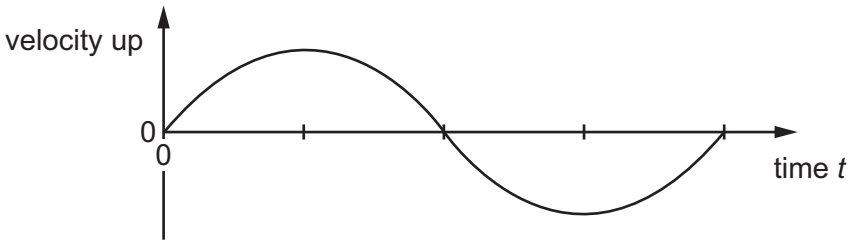

B

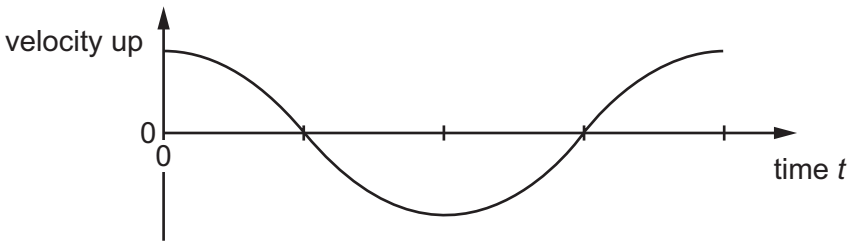

C

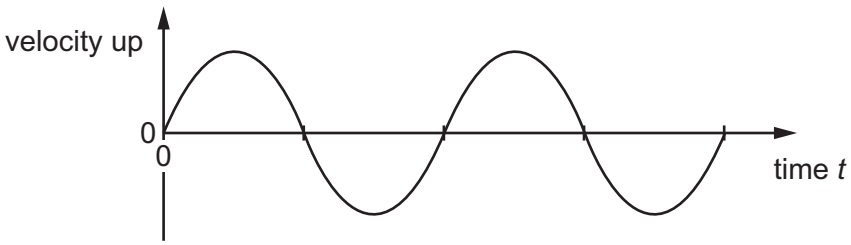

D

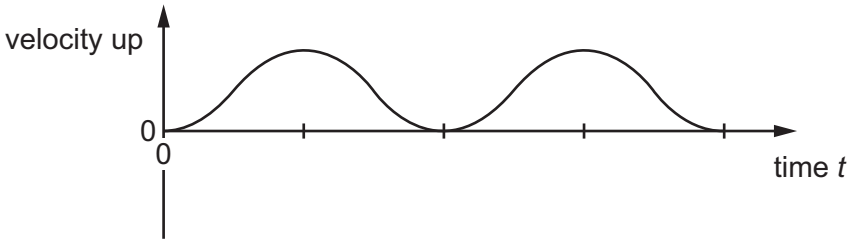

7 A stone is thrown vertically upwards from a point that is 12 m above the sea. It then falls into the sea below after 3.4 s.

Air resistance is negligible.

At which speed was the stone released when it was thrown?

A $3.5\,m\,s^{-1}$ **B** $6.6\,m\,s^{-1}$ **C** $13\,m\,s^{-1}$ **D** $20\,m\,s^{-1}$

© UCLES 2019

8 Two balls X and Y are moving towards each other with speeds of $5\,m\,s^{-1}$ and $15\,m\,s^{-1}$ respectively.

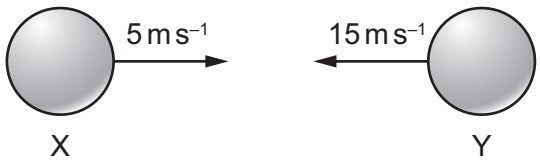

They make a perfectly elastic head-on collision and ball Y moves to the right with a speed of $7\,m\,s^{-1}$.

What is the speed and direction of ball X after the collision?

A $3\,m\,s^{-1}$ to the left

B $13\,m\,s^{-1}$ to the left

C $3\,m\,s^{-1}$ to the right

D $13\,m\,s^{-1}$ to the right

9 In the absence of air resistance, a ball thrown horizontally from a tower with velocity v, will land after time T seconds.

If, however, air resistance is taken into account, which statement is correct?

A The ball lands with a horizontal velocity less than v after more than T seconds.

B The ball lands with a horizontal velocity less than v after T seconds.

C The ball lands with a horizontal velocity v after more than T seconds.

D The ball lands with a horizontal velocity v after T seconds.

10 Two balls, of masses m and $2m$, travelling in a vacuum with initial velocities $2v$ and v respectively, collide with each other head-on, as shown.

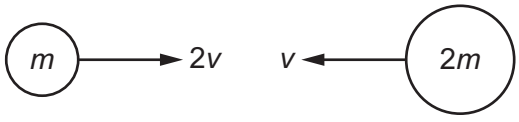

After the collision, the ball of mass m rebounds to the left with velocity v.

What is the loss of kinetic energy in the collision?

A $\frac{3}{4}mv^2$ **B** $\frac{3}{2}mv^2$ **C** $\frac{9}{4}mv^2$ **D** $\frac{9}{2}mv^2$

© UCLES 2019

11 A ball falls through a liquid at a constant speed. It is acted upon by three forces: an upthrust, a drag-force and its weight.

Which statement is correct?

A The drag-force increases with increasing depth.

B The drag-force is equal to the sum of the upthrust and weight.

C The upthrust is constant with increasing depth.

D The weight is greater than the sum of the drag-force and the upthrust.

12 A fairground ride consists of four carriages connected to a central vertical pole, as shown in the following view from above.

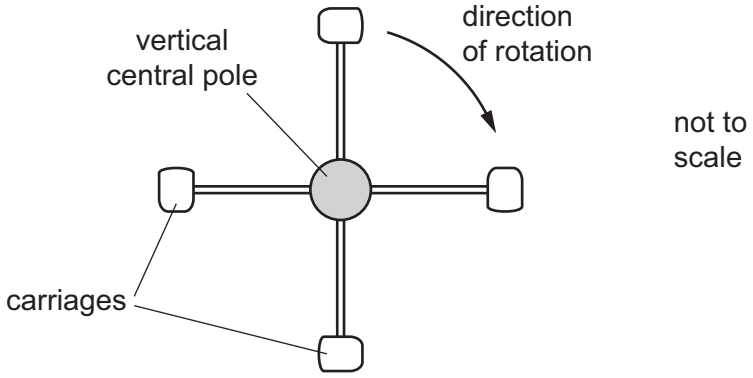

A motor rotates the central pole about its axis. This results in the four carriages each moving along a circular path.

The distance from the middle of each carriage to the centre of the pole is 3.20 m. When they are moving, each carriage experiences an air resistance force of 85.0 N. Assume that there are no other significant resistive forces.

Which torque does the motor need to apply to the pole to keep the system rotating at constant maximum speed?

A 5.44 N m **B** 272 N m **C** 544 N m **D** 1090 N m

© UCLES 2019

13 A uniform horizontal beam OX, 4.0 m long and weighing 100 N, is hinged at a wall at point O. It is supported by a cord XY which is attached to the wall at Y.

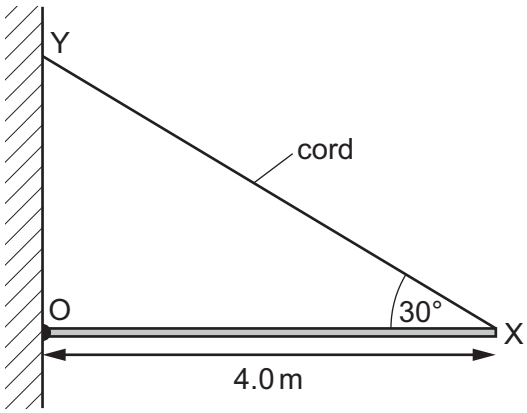

What is the tension in the cord?

A 50 N **B** 58 N **C** 86 N **D** 100 N

14 An object shaped as a hemisphere rests with its flat surface on a table. The object has radius r and density ρ.

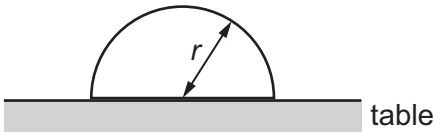

The volume of a sphere is $\frac{4}{3}\pi r^3$.

Which average pressure does the object exert on the table?

A $\frac{1}{3}\rho r^2$ **B** $\frac{1}{3}\rho r^2 g$ **C** $\frac{2}{3}\rho r$ **D** $\frac{2}{3}\rho rg$

15 Which statement best represents the principle of conservation of energy?

A Energy cannot be used faster than it is created.

B The supply of energy is limited, so energy must be conserved.

C The total energy in a closed system is constant.

D The total energy input to a system is equal to the useful energy output.

16 A crane is being used to lift containers off a ship. One container has a mass of 14 000 kg and is being lifted vertically with a speed of 3.2 m s^{-1}.

The electric motor being used to supply the power to lift the container is using a current of 240 A at a potential difference of 2200 V.

What is the efficiency of the system?

A 8.1% **B** 8.5% **C** 48% **D** 83%

© UCLES 2019

17 The data below are taken from a test of a petrol engine for a motor car.

power output	150 kW
fuel consumption	20 litres per hour
energy content of fuel	40 MJ per litre

What is the ratio $\frac{\text{power output}}{\text{power input}}$?

A $\frac{150\times10^{3}}{40\times10^{6}\times20\times60\times60}$

B $\frac{150\times10^{3}\times60\times60}{20\times40\times10^{6}}$

C $\frac{150\times10^{3}\times40\times10^{6}\times20}{60\times60}$

D $\frac{150\times10^{3}\times20}{40\times10^{3}\times60\times60}$

18 Leonardo da Vinci proposed a flying machine that would work like a screw to lift the pilot into the air. The 'screw' is rotated by the pilot.

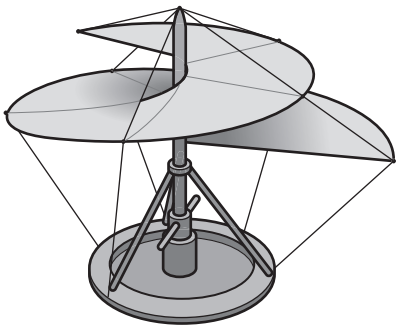

The machine and the pilot together have a total mass of 120 kg.

Which useful output power must the pilot provide to move vertically upwards at a constant speed of 2.5 m s^{-1}?

A 48 W **B** 300 W **C** 470 W **D** 2900 W

19 A metal wire, fixed at one end, has length l and cross-sectional area A. The wire extends a distance e when mass m is hung from the other end of the wire.

What is an expression for the Young Modulus E of the metal?

A $E = \frac{ml}{Ae}$ **B** $E = \frac{mgl}{Ae}$ **C** $E = \frac{me}{Al}$ **D** $E = \frac{mge}{Al}$

© UCLES 2019

20 A spring has a spring constant of 6.0 N cm $^{-1}$. It is joined to another spring whose spring constant is 4.0 N cm^{-1}. A load of 80 N is suspended from this composite spring.

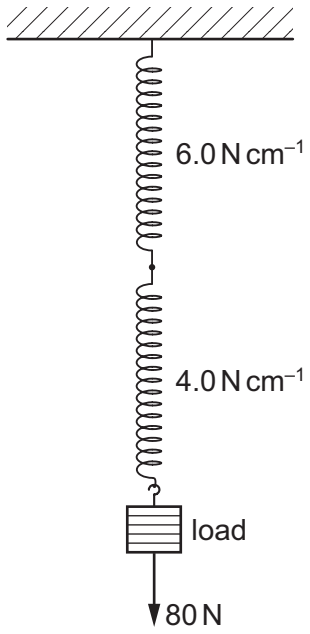

What is the extension of this composite spring?

A 8.0 cm **B** 16 cm **C** 17 cm **D** 33 cm

21 The graph shows the extension of a sample of a type of rubber as different loads *F* are applied and then gradually removed.

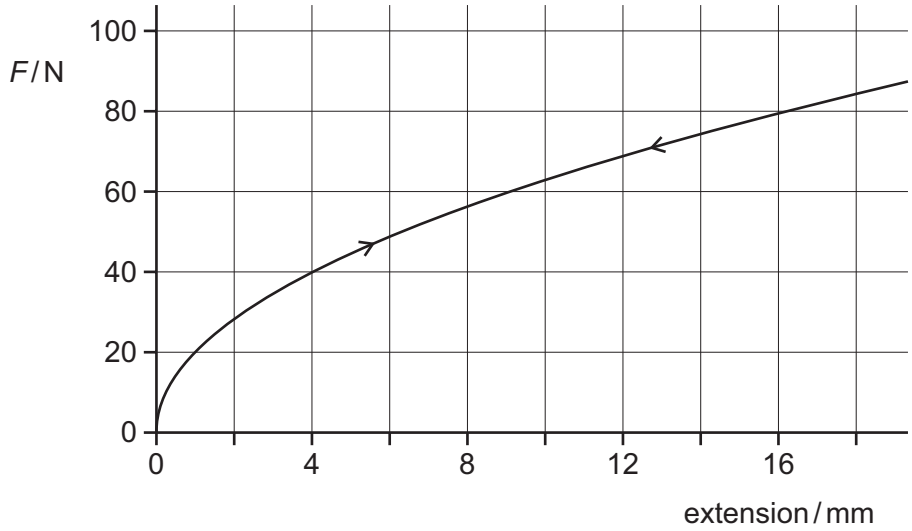

What is the best estimate of the strain energy in the rubber when a load of 80 N is applied?

A 0.40 J **B** 0.64 J **C** 0.88 J **D** 1.3 J

22 A sound wave passes through air.

The diagram shows the positions of the molecules of the air at one instant.

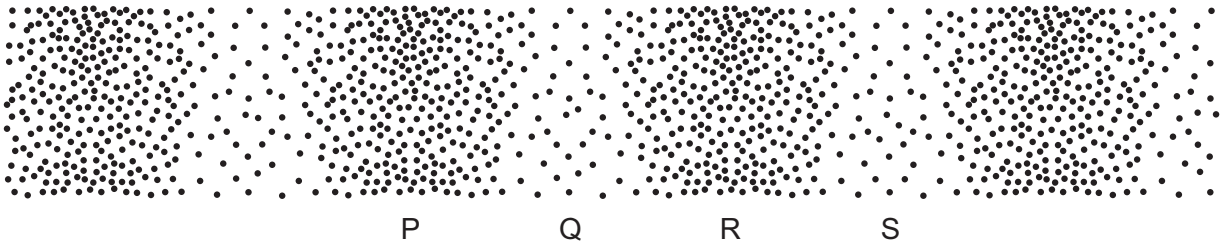

Which distance is equal to the wavelength of the wave?

A PQ **B** PS **C** QR **D** QS

23 The top row of bars represents a set of particles inside the Earth and at rest.

The lower row represents the same particles at one instant as a longitudinal wave passes from left to right through the Earth.

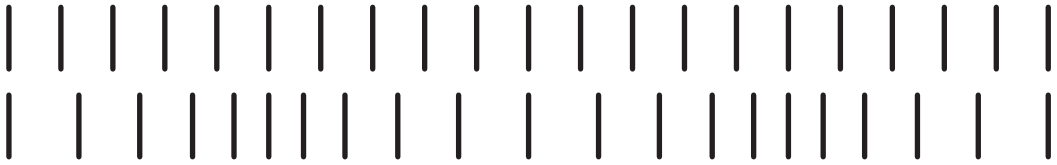

What should be measured to determine the amplitude of the oscillations of the particles in the lower row as the wave passes?

A half the maximum displacement of the particles from their position at rest

B half the maximum distance apart of the particles

C the maximum displacement of the particles from their position at rest

D the maximum distance apart of the particles

24 A straight tube is closed at one end and has a loudspeaker positioned at the open end. The frequency of the loudspeaker is initially very low and is increased slowly. A series of loudness maxima are heard. The stationary wave which gives the first maximum has a node at the closed end and an antinode at the open end. The frequency of the loudspeaker is f_1 when the first maximum is heard.

What is the frequency of the loudspeaker when the fourth maximum is heard?

A $\frac{7f_1}{4}$ **B** $2f_1$ **C** $4f_1$ **D** $7f_1$

© UCLES 2019

25 A buzzer emitting sound of frequency 846 Hz is attached to a string and rotated in a horizontal circle. The linear speed of the buzzer is 25.0 m s^{-1}.



The speed of sound is 340 m s^{-1}.

What is the maximum frequency heard by the observer?

A 783 Hz **B** 788 Hz **C** 908 Hz **D** 913 Hz

26 The diagram shows the principal regions of the electromagnetic spectrum, with some details labelled. The diagram is not to scale.

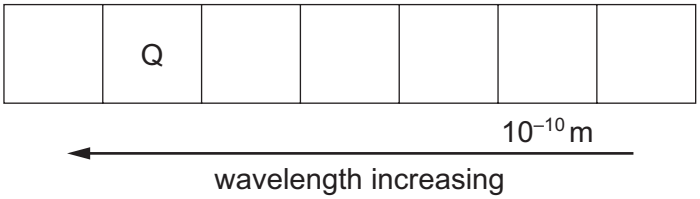

What is a typical order of magnitude of the wavelength of the radiation in region Q?

A 10^{-7} m **B** 10^{-5} m **C** 10^{-2} m **D** 10^{0} m

27 P and Q are fixed points at the end of a string. A transverse stationary wave of constant maximum amplitude is formed on the string.

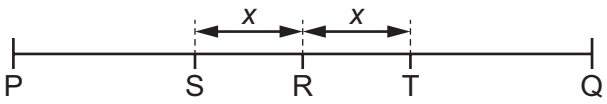

P, R and Q are the only points on the string where nodes are formed. S and T are two points on the string at a distance *x* from R.

What is the relationship between points S and T?

A the same amplitude and in phase

B different amplitudes and in phase

C the same amplitude and a phase difference of 180°

D different amplitudes and a phase difference of 180°

28 Two identical loudspeakers are connected in series to an a.c. supply, as shown.

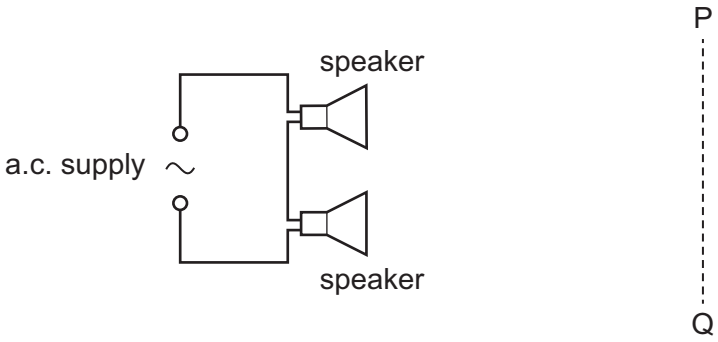

A microphone is moved along the line PQ.

Which graph best shows the variation with distance from P of the intensity of the sound detected by the microphone?

A

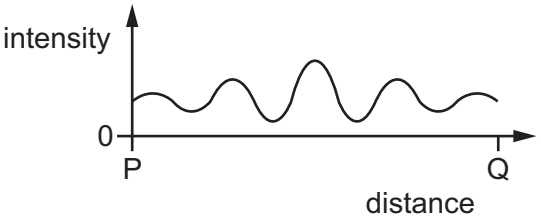

B

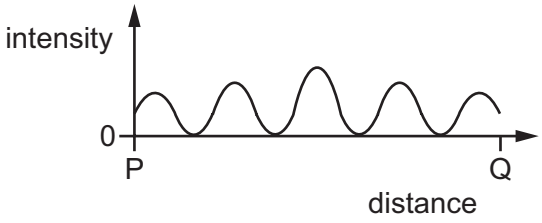

C

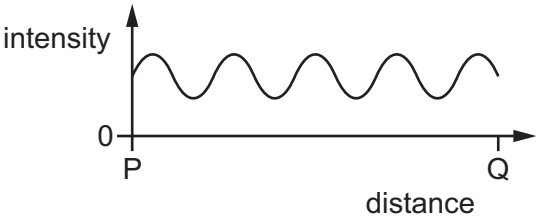

D

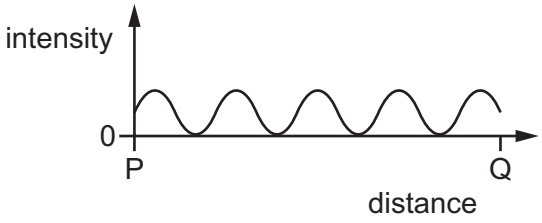

© UCLES 2019

29 A diffraction grating experiment is set up using orange light of wavelength 600 nm. The grating has a slit separation of 2.00 μm.

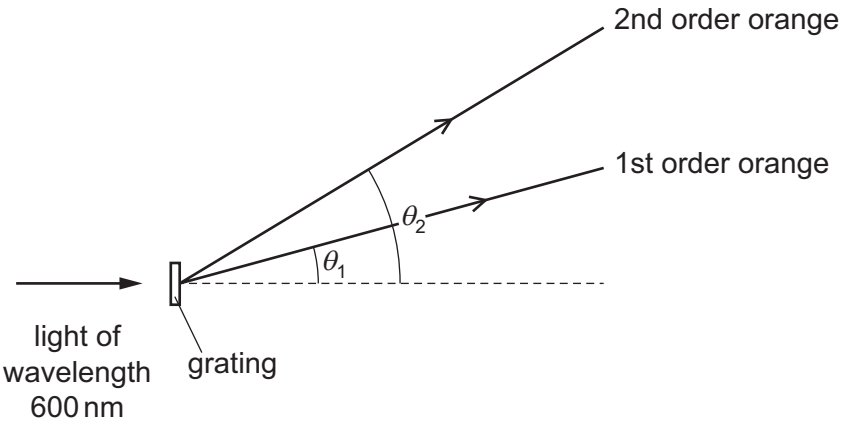

What is the angular separation ($\theta_2 - \theta_1$) between the first and second order maxima of the orange light?

A 17.5° **B** 19.4° **C** 36.9° **D** 54.3°

30 Two horizontal parallel plate conductors are separated by a distance of 5.0 mm in air. The lower plate is earthed and the potential of the upper plate is +50 V.

What is the electric field strength *E* at a point midway between the plates?

A $1.0 \times 10^4\,\text{V m}^{-1}$ downwards

B $1.0 \times 10^4\,\text{V m}^{-1}$ upwards

C $2.0 \times 10^4\,\text{V m}^{-1}$ downwards

D $2.0 \times 10^4\,\text{V m}^{-1}$ upwards

© UCLES 2019

31 The diagram shows the electric field near a point charge and two electrons X and Y.

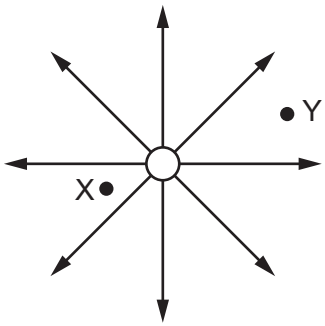

Which row describes the forces acting on X and on Y?

	direction of force	magnitude of force on X
A	radially inwards	less than force on Y
B	radially inwards	greater than force on Y
C	radially outwards	less than force on Y
D	radially outwards	greater than force on Y

32 The electric current in a wire may be calculated using the equation $I = Anvq$.

Which statement is **not** correct?

A n is the number of charge carriers per unit volume of the wire.

B nA is the number of charge carriers per unit length of the wire.

C q is the charge of each charge carrier.

D v is the velocity of each charge carrier.

© UCLES 2019

33 Three resistors are connected in parallel across a power supply, as shown.

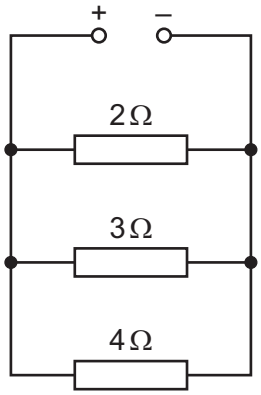

The power dissipated in each of the resistors of resistance 2Ω, 3Ω and 4Ω is P_2, P_3 and P_4 respectively.

What is the ratio $P_2 : P_3 : P_4$?

A 2:3:4 **B** 4:3:2 **C** 6:4:3 **D** 36:16:9

34 Which graph shows the variation with current I of the potential difference V of a filament lamp?

A

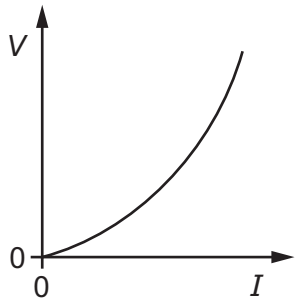

B

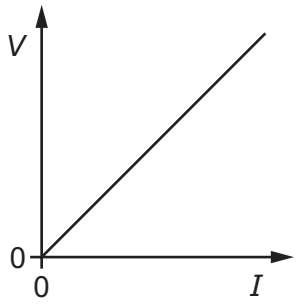

C

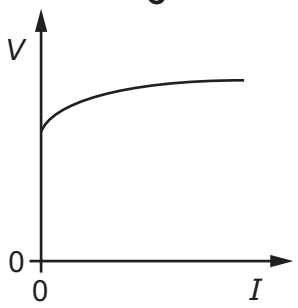

D

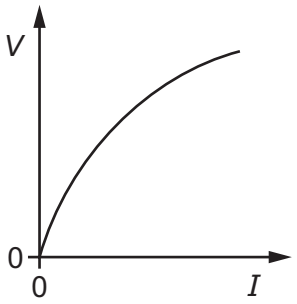

35 A wire of cross-sectional area $5.0 \times 10^{-6}\,m^2$ is made of a metal of resistivity $50 \times 10^{-8}\,\Omega m$.

The potential difference across the wire is 6.0 V and the current is 3.0 A.

What is the length of the wire?

A 0.050 m **B** 0.20 m **C** 5.0 m **D** 20 m

36 A cell of internal resistance r and electromotive force (e.m.f.) E is connected in series with a resistor of resistance R.

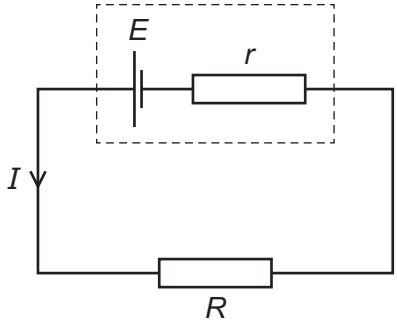

The resistance R and the e.m.f. E remain fixed. The internal resistance r of the cell changes over time.

Which graph best shows the variation of the current I in the circuit with the internal resistance r?

A

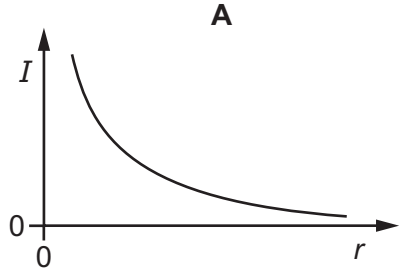

B

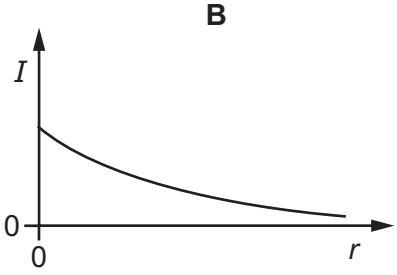

C

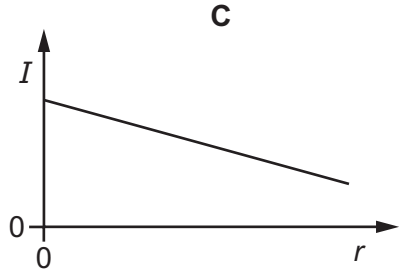

D



© UCLES 2019

37 Identical resistors are connected in four combinations P, Q, R and S between terminals X and Y.

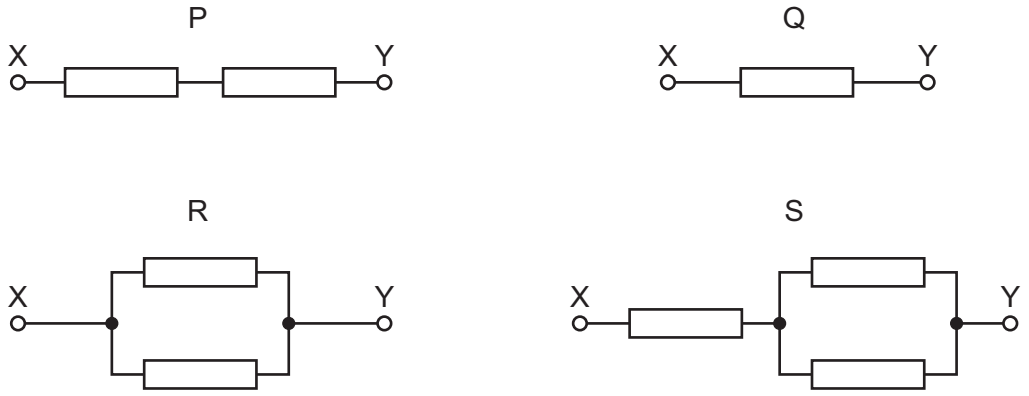

What is the order of decreasing combined resistance between X and Y (largest first)?

A P → S → Q → R

B P → S → R → Q

C Q → R → S → P

D S → P → Q → R

38 The circuit shown consists of two resistors of resistances 10 kΩ and 50 kΩ and a component Y.

A 6.0 V supply is provided. The electric potential of the bottom wire is 0 V.

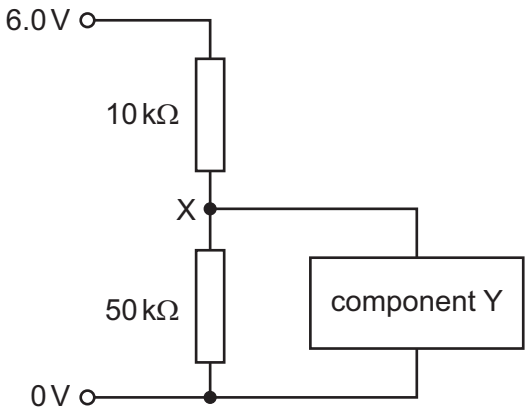

The current in component Y is negligible.

What is the electric potential at junction X?

A 1.0 V **B** 1.2 V **C** 4.8 V **D** 5.0 V

39 A neutron ${}^{1}_{0}\text{n}$ is fired at a ${}^{235}_{92}\text{U}$ nucleus. The neutron is absorbed by the nucleus which then splits to form nuclei of ${}^{141}_{56}\text{Ba}$ and ${}^{92}_{36}\text{Kr}$.

What is the number of neutrons emitted when the ${}^{235}_{92}\text{U}$ nucleus splits?

A 0 **B** 1 **C** 2 **D** 3

40 Which word equation represents β^+ decay?

A proton $\rightarrow$ neutron + electron + electron antineutrino

B proton $\rightarrow$ neutron + electron + electron neutrino

C proton $\rightarrow$ neutron + positron + electron antineutrino

D proton $\rightarrow$ neutron + positron + electron neutrino

Permission to reproduce items where third-party owned material protected by copyright is included has been sought and cleared where possible. Every reasonable effort has been made by the publisher (UCLES) to trace copyright holders, but if any items requiring clearance have unwittingly been included, the publisher will be pleased to make amends at the earliest possible opportunity.

To avoid the issue of disclosure of answer-related information to candidates, all copyright acknowledgements are reproduced online in the Cambridge Assessment International Education Copyright Acknowledgements Booklet. This is produced for each series of examinations and is freely available to download at www.cambridgeinternational.org after the live examination series.

Cambridge Assessment International Education is part of the Cambridge Assessment Group. Cambridge Assessment is the brand name of the University of Cambridge Local Examinations Syndicate (UCLES), which itself is a department of the University of Cambridge.

© UCLES 2019